S.S. RHS 30° FLUSH MOUNT REAR WALL & CISTERN GRAB RAIL SET

BTR-01-020

The BRITEX Stainless Steel Right-Hand 30° Flush Mount Rear Wall & Cistern Grab Rail Set is designed to provide safe and reliable support in accessible washrooms. This AS1428-compliant grab rail set is ideal for public amenities and commercial washrooms requiring a right-hand side configuration.

Features and Benefits

- **AS1428 Compliant Design –** Supports accessibility requirements for public and commercial washrooms.
- **Right-Hand Side Configuration –** Designed to suit right-hand accessible toilet layouts and user needs.

Multi-Point Concealed Fixings – Provides secure installation with a clean, professional appearance.

- **Rear Wall & Cistern Rail Set –** Includes a 300mm cistern rail to deliver enhanced support, stability and user confidence.

Sample Spec

BTR-01-020: S.S. 30° Flush Mount Rear/Side Wall 950x700 & Cistern Grab Rail Set Right Hand Side User - Includes 300mm Rail

*RED TEXT may denote a variable where one option only is to be selected, a nominal dimension that needs to be specified, or an optional feature that can be removed if not required. Please refer to the back of this page for additional specification details and options.

MODEL BTR-01-020 Front View

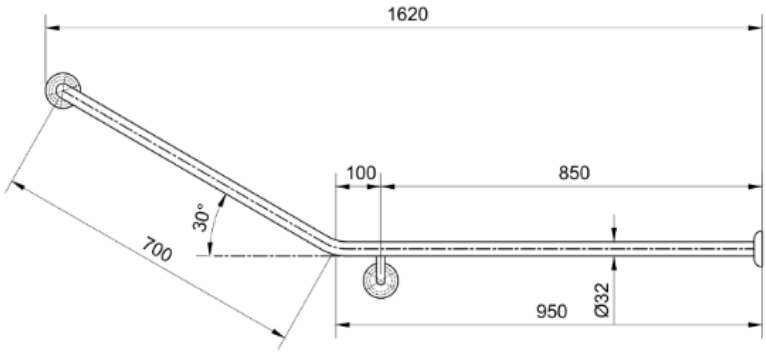

MODEL BTR-01-020 Plan View

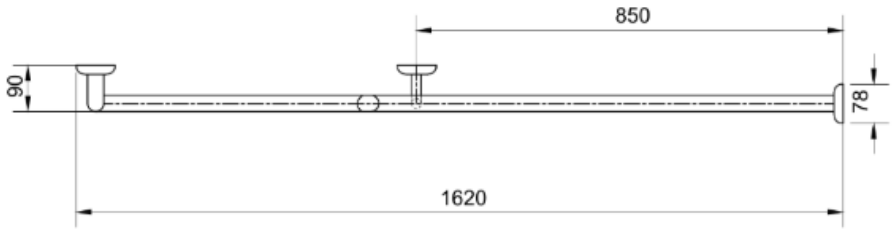

MODEL BTR-01-038 Side view

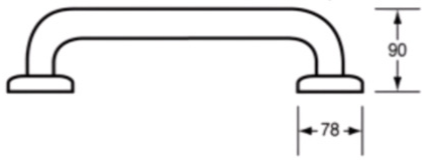

MODEL BTR-01-038 Front view

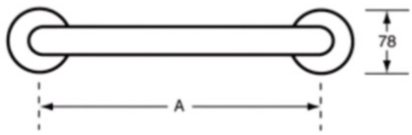

MODEL BTR-01-038 Rear view

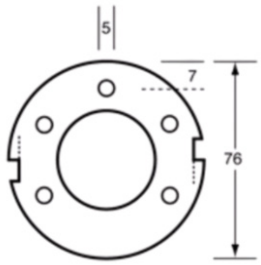

Options:

- Left Hand or Right Hand Side application

VISIT BRITEX.COM.AU TO DOWNLOAD BIM FILES, CAD DRAWINGS AND THE MOST CURRENT PRODUCT LITERATURE.

Last Revised 14 Sep 2026 | Rev 1